Turcon® Buffer Ring with Back-pressure Relief

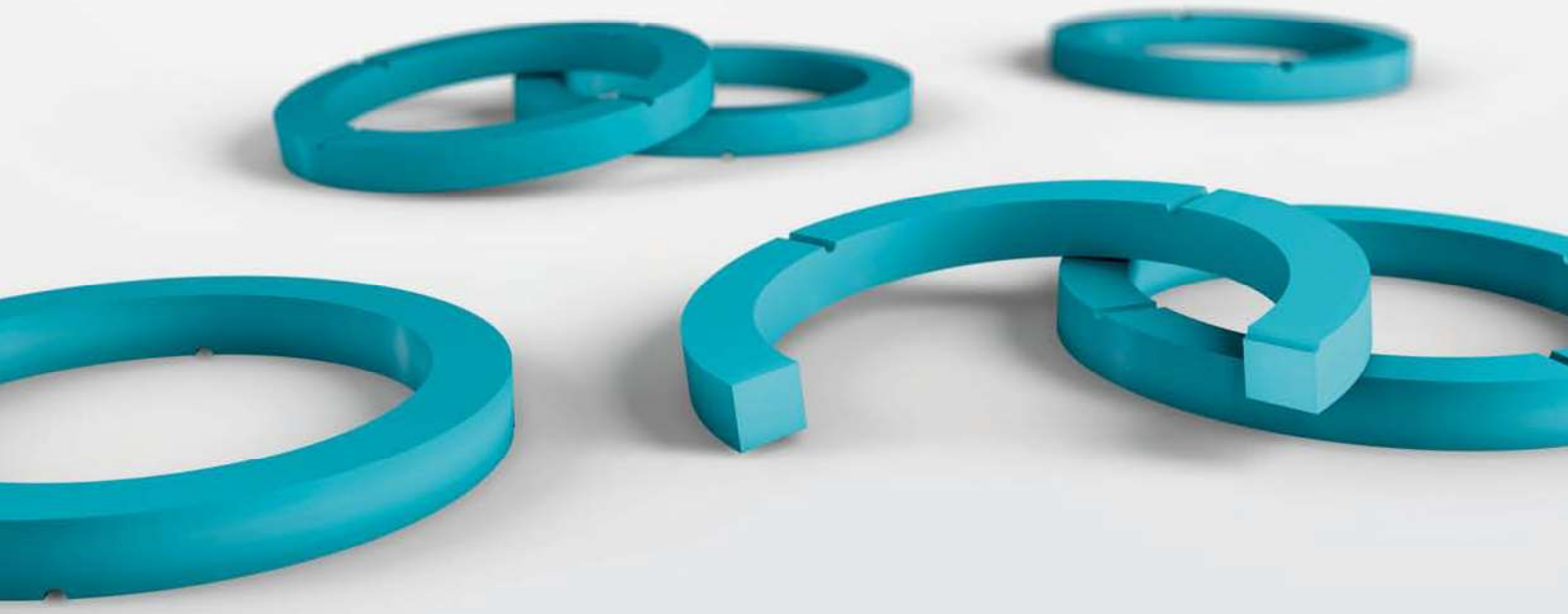

Turcon® Buffer Ring with Back-pressure Relief

Description

The term "Buffer Ring" has traditionally been used for elements protecting the actual sealing system from damaging high pressure peaks. The Turcon® Buffer Ring is not required to have high sealing effect but it must prevent a pressure trap from forming between the Buffer Ring and the actual seal.

Turcon® Buffer Ring is successfully used as a seal in injection molding machines for the Rotating Injection Unit – a unique utilization of a basic element for helical movements, securing long lifetime.

The Buffer Ring concept is also used in several other situations - alone, as a set of two, or as high pressure protection for other rotary or linear seals by lowering their contribution to friction and seal wear.

METHOD OF OPERATION

Turcon® Buffer Ring is kept in contact with the counter surface by a small interference fit and only activated by differential pressure over the seal. It is further characterized by having notches on one side as relief for backpressure.

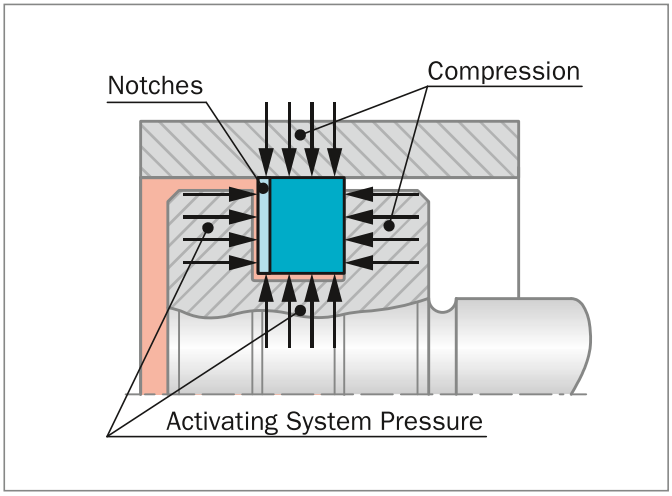

Figure 175: Pressure activation of Turcon® Buffer Ring

The sealing effect is higher and much safer than a Z-cut Piston Ring. Without an O-Ring as activation and static sealing elements, the fluid film is excessive between the Buffer Ring and moving counter surfaces, providing very low friction and wear and resulting in long service life.

The pressure activation takes place in axial and radial outwards directions for bore sealing (radial and inwards for shaft sealing) offering sealing function in a number of applications.

With notches on one side, the Buffer Ring is a single-acting seal ring often used as protector of a common sealing system against peak pressures where the notch prevents risk of pressure trap.

If a double-acting sealing effect is required, it is necessary to install two Buffer Rings back-to-back to take the pressure from both sides (see Figure 175 and Figure 176).

ADVANTAGES

- For rotary, helical and linear motion
- Minimum friction contribution for low energy loss
- Minimum heat generation
- Fully lubricated sealing surfaces
- Low wear ensures long service life
- Protects against pressure peaks
- Increased radial clearance possible
- Prevents pressure trap
- One-piece element
- For lubricating and non lubricating fluids depending on seal material (Turcon® , Zurcon®)

Not recommended for static function because of absence of elastomer activation and static sealing element.

SHAFT SEALING SYSTEM

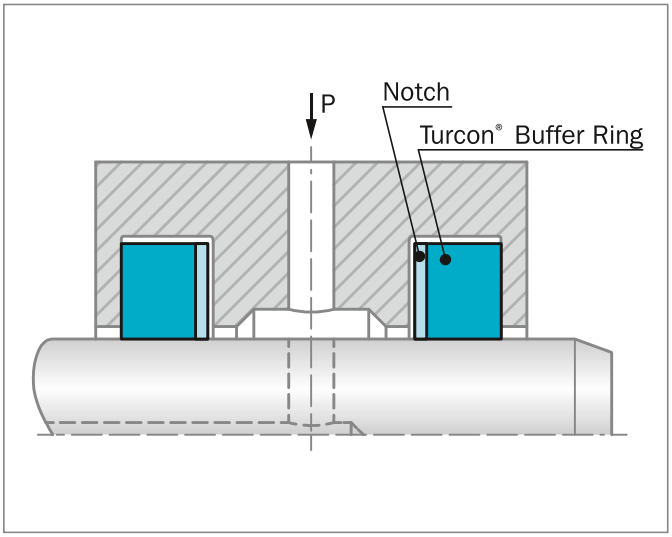

Figure 176: Right installation of Turcon® Buffer Ring

BORE SEALING SYSTEM

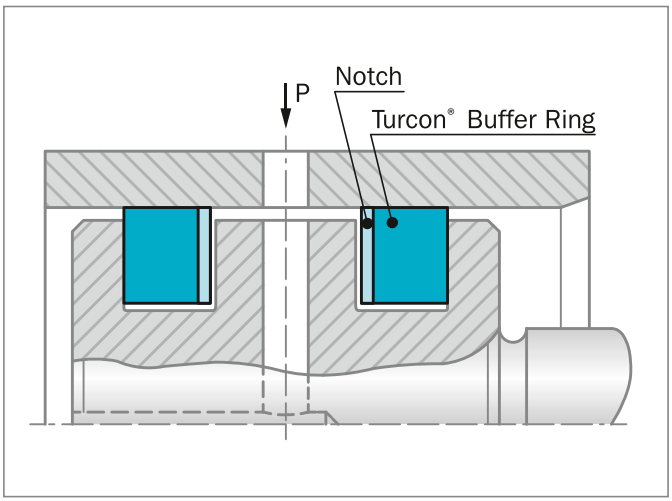

Figure 177: Right installation of Turcon® Buffer Ring

APPLICATIONS

Buffer Rings are typically used:

- Where the requirement of tightness is less than 100%
- Where a wet or fully lubricated seal is required
- Protection of peak pressures in front of sealing systems.
- For very low friction and /or long life sealing systems (with low requirement to tightness)
- Rotating Injection Units in Injection molding machines

OPERATING CONDITIONS

The Turcon® Buffer Ring is recommended for rotary and helical service and reciprocating movements with a length of stroke at least twice the groove width.

Pressure:	Up to 30 MPa as single seal element
Speed:	Up to 15 m/s - linear
pv:	Up to 10 MPa x m/s - rotary
Frequency:	Up to 1 Hz
Temperature:	Piston seals: +5 °C to +160 °C*) Rod seals: -45 °C to +70 °C**)
Media:	Mineral oil-based hydraulic fluids, flame retardant hydraulic fluids, environmentally friendly hydraulic fluids (bio-oils), phosphate ester, water and others, depending on the seal material compatibility.
Clearance:	The maximum permissible radial clearance S_{max} is shown in Table 127 and Table 128 as a function of the operating pressure and functional diameter.

IMPORTANT NOTE

The above data are maximum values and cannot be used at the same time, e.g. the maximum operating speed depends on material type, pressure, temperature and gap value.

Temperature range also depends on media.

*) For bore seals: Buffer Ring is not activated by an elastomer element to compensate for temperature expansion/contraction, and if unpressurized service occurs at temperatures below +5 °C the seal ring will contract and might lose contact with the bore surface.

**) For shaft seals: Buffer Ring is not activated by an elastomer element to compensate for temperature expansion/contraction and if unpressurized service occurs at temperatures above +70 °C the seal ring will expand and might lose contact with the shaft surface.

In general: Before an application with Buffer Ring is qualified for service, functional tests must be performed under all expected working conditions.

INSTALLATION INSTRUCTIONS

Turcon® and Zurcon® materials recommended for Buffer Ring are flexible and installation is done as for Turcon® Roto Glyd Ring® see page 313.

Closed groove installation limits for Buffer Ring see Table 115 and Table 116.

RECOMMENDED MATERIALS

The following material combinations have proven effective for hydraulic applications:

Turcon® Buffer Ring in Turcon® M12
All round material for hydraulic applications with reciprocating, short stroke or helical movements in mineral oils, flame retardant hydraulic fluids HFC, phosphate ester or bio-oils:
Material code: M12

Turcon® Buffer Ring in Turcon® M15
Material with high sealing effect for rotary or oscillating applications in fluids with good lubrication:
Material code: M15

Turcon® Buffer Ring in Turcon® T40
For fluids with low lubricating properties:
Material code: T40

Table 124: Turcon® and Zurcon® Materials for Buffer Ring

Material, Applications, Properties	Code	Mating Surface Material	MPa as Single Seal Element
Turcon® M12 For all commonly applied hydraulic fluids including fluids with low lubrication performance Lowest friction and best sliding properties Lowest wear on seals Improved absorption of abrasive contaminants Low wear or abrasion of counter surface Mineral fiber and Additives filled Color: Dark gray	M12	Steel Steel hardened Steel chrome plated (rod) Steel plated (rod) Cast iron Stainless steel Titanium Aluminum (tubes)	30
Turcon® M15 For lubricating fluids Excellent for rotary service High sealing effect Very good wear properties Low friction Polyaramid, mineral fiber, lubricant and graphite filled Color: Dark gray	M15	Steel hardened Steel chrome plated (shaft) Steel plated (shaft) Cast iron	30
Turcon® T40 For linear, rotary and turning movements in fluids with low lubricating properties, e.g. water Surface texture not suitable for gasses Carbon fiber filled Color: Grayite filled Color: Black	T40	Steel Steel hardened Steel chrome plated (shaft) Cast iron Stainless steel Aluminum	30
Zurcon® Z53* For mineral oil based fluids Linear and slowly turning movements Very high abrasion and extrusion resistance For counter surface with rougher surface finish Hard to install Limited chemical resistance Max. working temperature +110 °C Cast polyurethane Color: Yellow to light-brown	Z53	Steel Steel hardened Steel chrome plated (rod) Cast iron Stainless steel Ceramic coating	30

Table is continued on next page

Material, Applications, Properties	Code	Mating Surface Material	MPa as Single Seal Element
Zurcon® Z80*	Z80	Steel	30
For lubricating fluids and fluids with low lubricating properties, water, air and gases at low pressure.		Steel hardened	
Dry air pneumatics		Steel chrome plated (rod)	
Linear and slowly turning movements		Stainless steel	
Good abrasion and extrusion resistance		Aluminum	
For service in abrasive conditions and media with particles		Ceramic coating	
Good chemical resistance			
Not for constant rotation			
Max. working temperature +80 °C			
UHMWPE (Ultra high molecular weight polyethylene)			
Color: White to off-white			

* OD max. ø 2,300 mm – ID max. ø 2,200 mm.
Highlighted materials are recommended.

Installation Recommendation for Shaft

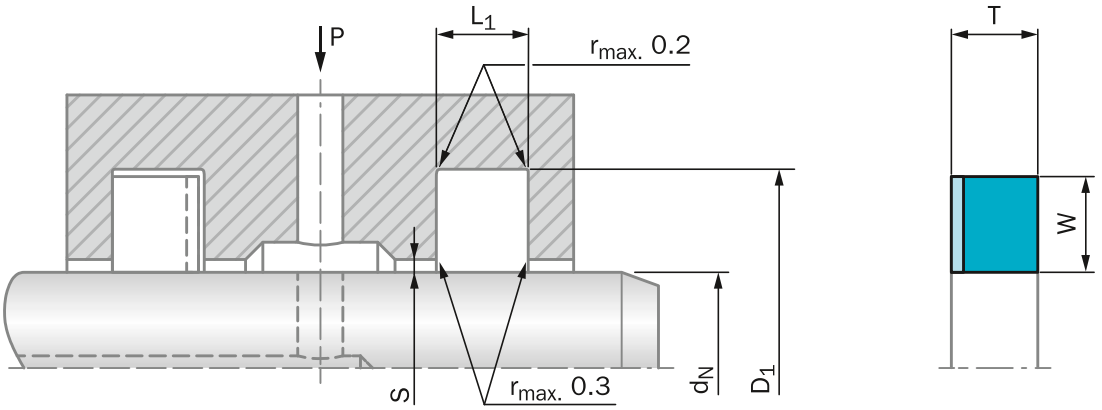

Figure 178: Installation Drawing

Table 125: Installation Dimensions – Standard Recommendations

Series Number	Shaft Diameter d_N f8/h9		Groove Depth	Groove Width	Ring Thick-ness	Ring Width	Radial Clearance S_{max}*			Min. Dia. for Closed Groove Installation
	Recommended Range	Available Range	D_1 +0.4/-0	L_1 +0.2/-0	W	T	10 MPa	20 MPa	30 MPa	mm
RFB20	20.0 - 44.9	4.0 - 129.9	d_N + 4.20	2.00	1.95	1.85	0.20	0.15	-	20
RFB30	45.0 - 59.9	6.0 - 449.9	d_N + 6.20	3.00	2.95	2.85	0.25	0.20	0.15	35
RFB40	60.0 - 99.9	12.0 - 649.9	d_N + 8.20	4.00	3.85	3.85	0.30	0.25	0.20	50
RFB50	100.0 - 199.9	38.0 - 649.9	d_N + 10.20	5.00	4.85	4.85	0.35	0.30	0.25	80
RFB60	200.0 - 399.9	200.0 - 999.9	d_N + 14.20	6.00	6.80	5.85	0.40	0.35	0.30	120
RFB70	400.0 - 799.9	260.0 - 999.9	d_N + 16.20	7.00	7.80	6.80	0.45	0.40	0.35	330
RFB80	800.0 - 999.9	400.0 - 999.9	d_N + 18.20	8.00	8.80	7.80	0.50	0.45	0.40	650
RFB8X	1,000.0 - 2,600.0**	-	d_N + 18.20	8.00	8.80	7.80	0.50	0.45	0.40	1,000

* At pressures **> 30 MPa**: Use diameter tolerance H8/f8 (bore/shaft) in area of seal.
Slydring® /Wear-Rings are not applicable at very small clearances; consult the Slydring® catalog.
** Z53 max. ø 2,200 mm

ORDERING EXAMPLE

Turcon® Buffer Ring, standard application:

Series:	RFB50 (from Table 125)
Shaft diameter:	d_N = 120 mm
TSS Part No.:	RFB501200 (from Table 128)

Select the material from Table 124. The corresponding code numbers are appended to the TSS Part No. Together they form the TSS Article No. The TSS Article No. for all intermediate sizes not shown in Table 128 can be determined following the example opposite. Buffer Ring is available in all sizes. The ring will always be supplied with notches on one side only. Other ring thicknesses and ring widths are available upon request.

TSS Article No. RFB5 0 1200 - M15 N

- Series No. — RFB5
- Type (Standard) — 0
- Shaft Diameter x 10*** — 1200
- Quality Index (Standard) — -
- Material Code (Seal Ring) — M15
- Material Code (O-Ring) — N

*** For diameters d_N ≥ 1,000.0 mm multiply by 1
Example: RFB8X for diameter d_N = 1,500.0 mm
Article No. RFB8**X1500**-M15

Table 126: Standard Installation Dimensions / TSS Part Number

Shaft Dia.	Groove Dia.	Groove Width	TSS Part No.	Buffer Ring
d_N f8/h9	D_1 +0.4/-0	L_1 +0.20		W x T
20.0	24.2	2.0	RFB200220	1.95 x 1.85
22.0	26.6	2.0	RFB200200	1.95 x 1.85
25.0	29.2	2.0	RFB200250	1.95 x 1.85
28.0	39.2	2.0	RFB200280	1.95 x 1.85
30.0	40.2	2.0	RFB200300	1.95 x 1.85
32.0	44.2	2.0	RFB200320	1.95 x 1.85
35.0	47.5	2.0	RFB200350	1.95 x 1.85
36.0	48.5	2.0	RFB200360	1.95 x 1.85
40.0	52.5	2.0	RFB200400	1.95 x 1.85
42.0	46.2	2.0	RFB200420	1.95 x 1.85
45.0	51.2	3.0	RFB300450	2.95 x 2.85
48.0	54.2	3.0	RFB300480	2.95 x 2.85
50.0	56.2	3.0	RFB300500	2.95 x 2.85
52.0	58.2	3.0	RFB300520	2.95 x 2.85
55.0	55.0	3.0	RFB300550	2.95 x 2.85
56.0	62.2	3.0	RFB300560	2.95 x 2.85
60.0	68.2	4.0	RFB400600	3.85 x 3.85
63.0	71.2	4.0	RFB400630	3.85 x 3.85
65.0	73.2	4.0	RFB400650	3.85 x 3.85
70.0	78.2	4.0	RFB400700	3.85 x 3.85
75.0	83.2	4.0	RFB400750	3.85 x 3.85
80.0	88.2	4.0	RFB400800	3.85 x 3.85
85.0	93.2	4.0	RFB400850	3.85 x 3.85
90.0	98.2	4.0	RFB400900	3.85 x 3.85
95.0	103.2	4.0	RFB400950	3.85 x 3.85
100.0	110.2	5.0	RFB501000	4.85 x 4.85
105.0	115.2	5.0	RFB501050	4.85 x 4.85
110.0	120.2	5.0	RFB501100	4.85 x 4.85
115.0	125.2	5.0	RFB501150	4.85 x 4.85
120.0	130.2	5.0	RFB501200	4.85 x 4.85
125.0	135.2	5.0	RFB501250	4.85 x 4.85
130.0	140.2	5.0	RFB501300	4.85 x 4.85
135.0	145.2	5.0	RFB501350	4.85 x 4.85
140.0	150.2	5.0	RFB501400	4.85 x 4.85
150.0	160.2	5.0	RFB501500	4.85 x 4.85
160.0	170.2	5.0	RFB501600	4.85 x 4.85
170.0	180.2	5.0	RFB501700	4.85 x 4.85
180.0	190.2	5.0	RFB501800	4.85 x 4.85
190.0	200.2	5.0	RFB501900	4.85 x 4.85
200.0	214.2	6.0	RFB602000	6.80 x 5.85
210.0	224.2	6.0	RFB602100	6.80 x 5.85
220.0	234.2	6.0	RFB602200	6.80 x 5.85
230.0	244.2	6.0	RFB60230	6.80 x 5.85
240.0	254.2	6.0	RFB602400	6.80 x 5.85
250.0	264.2	6.0	RFB602500	6.80 x 5.85
280.0	294.2	6.0	RFB602800	6.80 x 5.85
300.0	314.2	6.0	RFB603000	6.80 x 5.85
320.0	334.2	6.0	RFB603200	6.80 x 5.85
350.0	364.2	6.0	RFB603500	6.80 x 5.85
360.0	374.2	6.0	RFB603600	6.80 x 5.85
400.0	416.2	7.0	RFB704000	7.80 x 6.80
500.0	516.2	7.0	RFB705000	7.80 x 6.80
550.0	566.2	7.0	RFB705500	7.80 x 6.80
600.0	616.2	7.0	RFB706000	7.80 x 6.80
700.0	716.2	8.0	RFB707000	8.80 x 7.80
800.0	818.2	8.0	RFB808000	8.80 x 7.80
900.0	918.2	8.0	RFB809000	8.80 x 7.80
1,000.0	1,018.2	8.0	RFB8X1000	8.80 x 7.80
1,500.0	1,518.2	8.0	RFB8X1500	8.80 x 7.80
2,000.0	2,018.2	8.0	RFB8X2000	8.80 x 7.80
2,200.0	2,218.2	8.0	RFB8X2200	8.80 x 7.80
2,500.0	2,518.2	8.0	RFB8X2500	8.80 x 7.80
2,600.0	2,618.2	8.0	RFB8X2600	8.80 x 7.80

Other dimensions and all intermediate sizes up to 2,600 mm diameter including imperial (inch) sizes can be supplied.

Installation Recommendation for Bore

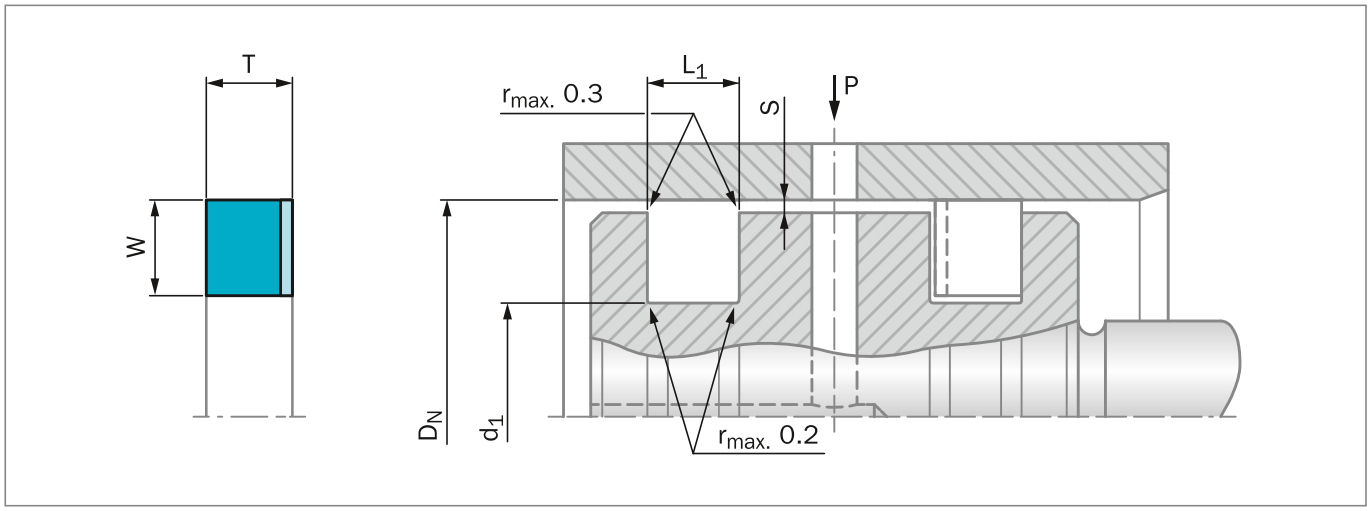

Figure 179: Installation Drawing

Table 127: Installation Dimensions – Standard Recommendations

Series Number	Bore Diameter D_N H9		Groove Depth	Groove Width	Ring Thick-ness	Ring Width	Radial Clearance S_{max}*			Min. Dia. for Closed Groove Installation
	Recommended Range	Available Range	d_1 0/-0.4	L_1 +0.2/-0	W	T	10 MPa	20 MPa	30 MPa	mm
PFB20	20.0 - 44.9	8.0 - 199.9	D_N - 4.20	2.00	1.95	1.85	0.50	0.45	0.40	20
PFB30	45.0 - 59.9	16.0 - 379.9	D_N - 6.20	3.00	2.95	2.85	0.50	0.45	0.40	35
PFB40	60.0 - 99.9	40.0 - 479.9	D_N - 8.20	4.00	3.85	3.85	0.50	0.45	0.40	50
PFB50	100.0 - 199.9	80.0 - 699.9	D_N - 10.20	5.00	4.85	4.85	0.50	0.45	0.40	80
PFB60	200.0 - 399.9	130.0 - 999.9	D_N - 14.20	6.00	6.80	5.85	0.50	0.45	0.40	120
PFB70	400.0 - 799.9	320.0 - 999.9	D_N - 16.20	7.00	7.80	6.80	0.50	0.45	0.40	330
PFB80	800.0 - 999.9	750.0 - 999.9	D_N - 18.20	8.00	8.80	7.80	0.50	0.45	0.40	750
PFB8X	1,000.0 - 2,700.0**	-	D_N - 18.20	8.00	8.80	7.80	0.50	0.45	0.40	1,000

* At pressures **> 30 MPa**: Use diameter tolerance H8/f8 (bore/piston) in area of seal.
Slydring® / Wear-Rings are not applicable at very small clearance; consult the Slydring® catalog.
** Z53 max. ø 2,300 mm

ORDERING EXAMPLE

Turcon® Buffer Ring, standard application:

Series:	PFB50 (from Table 127)
Bore diameter:	D_N = 120 mm
TSS Part No.:	PFB501200 (from Table 126)

Select the material from Table 124. The corresponding code numbers are appended to the TSS Part No. Together they form the TSS Article No. The TSS Article No. for all intermediate sizes not shown in Table 128 can be determined following the example opposite. Buffer Ring is available in all sizes. The ring will always be supplied with notches on one side only. Other ring thicknesses and ring widths are available upon request.

TSS Article No. PFB5 0 1200 - M15 N

- Series No. — PFB5
- Type (Standard) — 0
- Bore Diameter x 10*** — 1200
- Quality Index (Standard) — -
- Material Code (Seal Ring) — M15
- Material Code (O-Ring) — N

*** For diameters $D_N \geq$ 1,000.0 mm multiply by 1
Example: PFB8X for diameter D_N = 1,500.0 mm
Article No. PFB8**X1500**-M15

Table 128: Standard Installation Dimensions / TSS Part Number

Bore Dia.	Groove Dia.	Groove Width	TSS Part No.	Buffer Ring
D_N H9	d_1 +0/-0.4	L_1 +0.20		W x T
20.0	15.8	2.0	PFB200200	1.95 x 1.85
22.0	17.8	2.0	PFB200220	1.95 x 1.85
25.0	20.8	2.0	PFB200250	1.95 x 1.85
28.0	23.8	2.0	PFB200280	1.95 x 1.85
30.0	25.8	2.0	PFB200300	1.95 x 1.85
32.0	27.8	2.0	PFB200320	1.95 x 1.85
35.0	30.8	2.0	PFB200350	1.95 x 1.85
40.0	35.8	2.0	PFB200400	1.95 x 1.85
42.0	37.8	2.0	PFB200420	1.95 x 1.85
45.0	38.8	3.0	PFB300450	2.95 x 2.85
48.0	41.8	3.0	PFB300480	2.95 x 2.85
50.0	43.8	3.0	PFB300500	2.95 x 2.85
52.0	45.8	3.0	PFB300520	2.95 x 2.85
55.0	48.8	3.0	PFB300550	2.95 x 2.85
56.0	49.8	3.0	PFB300560	2.95 x 2.85
60.0	51.8	4.0	PFB400600	3.85 x 3.85
63.0	54.8	4.0	PFB400630	3.85 x 3.85
65.0	56.8	4.0	PFB400650	3.85 x 3.85
70.0	61.8	4.0	PFB400700	3.85 x 3.85
75.0	66.8	4.0	PFB400750	3.85 x 3.85
80.0	71.8	4.0	PFB400800	3.85 x 3.85
85.0	76.8	4.0	PFB400850	3.85 x 3.85
90.0	81.8	4.0	PFB400900	3.85 x 3.85
95.0	86.8	4.0	PFB400950	3.85 x 3.85
100.0	89.8	5.0	PFB501000	4.85 x 4.85
110.0	99.8	5.0	PFB501100	4.85 x 4.85
115.0	104.8	5.0	PFB501150	4.85 x 4.85
120.0	109.8	5.0	PFB501200	4.85 x 4.85
125.0	114.8	5.0	PFB501250	4.85 x 4.85
130.0	119.8	5.0	PFB501300	4.85 x 4.85
135.0	124.8	5.0	PFB501350	4.85 x 4.85
140.0	129.8	5.0	PFB501400	4.85 x 4.85
150.0	139.8	5.0	PFB501500	4.85 x 4.85
160.0	149.8	5.0	PFB501600	4.85 x 4.85
170.0	159.8	5.0	PFB501700	4.85 x 4.85
180.0	169.8	5.0	PFB501800	4.85 x 4.85
190.0	179.8	5.0	PFB501900	4.85 x 4.85
200.0	185.8	6.0	PFB602000	6.80 x 5.85
210.0	195.8	6.0	PFB602100	6.80 x 5.85
220.0	205.8	6.0	PFB602200	6.80 x 5.85
230.0	215.8	6.0	PFB602300	6.80 x 5.85
240.0	225.8	6.0	PFB602400	6.80 x 5.85
250.0	235.8	6.0	PFB602500	6.80 x 5.85
280.0	265.8	6.0	PFB602800	6.80 x 5.85
300.0	285.8	6.0	PFB603000	6.80 x 5.85
320.0	305.8	6.0	PFB603200	6.80 x 5.85
350.0	335.8	6.0	PFB603500	6.80 x 5.85
400.0	383.8	7.0	PFB704000	7.80 x 6.80
420.0	403.8	7.0	PFB704200	7.80 x 6.80
450.0	433.8	7.0	PFB704500	7.80 x 6.80
480.0	463.8	7.0	PFB704800	7.80 x 6.80
500.0	483.8	7.0	PFB705000	7.80 x 6.80
550.0	533.8	7.0	PFB705500	7.80 x 6.80
600.0	583.8	7.0	PFB706000	7.80 x 6.80
700.0	683.8	7.0	PFB707000	7.80 x 6.80
800.0	781.8	8.0	PFB808000	8.80 x 7.80
900.0	881.8	8.0	PFB809000	8.80 x 7.80
1,000.0	981.8	8.0	PFB8X1000	8.80 x 7.80
1,500.0	1,481.8	8.0	PFB8X1500	8.80 x 7.80
2,000.0	1,981.8	8.0	PFB8X2000	8.80 x 7.80
2,250.0	2,231.8	8.0	PFB8X2250	8.80 x 7.80
2,500.0	2,481.8	8.0	PFB8X2500	8.80 x 7.80
2,700.0	2,681.8	8.0	PFB8X2700	8.80 x 7.80

Other dimensions and all intermediate sizes up to 2,700 mm diameter including imperial (inch) sizes can be supplied.